ASME LISTED

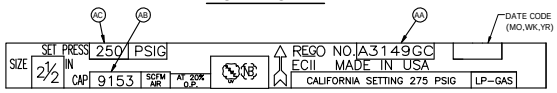

	VALVE RATING	
(AA) RELIEF VALVE NUMBER	(AC) SET PRESSURE (PSIG)	(AB) ASME FLOW DATA (SCFM AIR)
A3149GC	250	9,153

ASME/CE LISTED

	VALVE RATING		
(BA) RELIEF VALVE NUMBER	(BC) SET PRESSURE (PSIG)	(BD) SET PRESSURE (BAR) SEE NOTE C	(BE) ASME FLOW DATA (SCFM AIR)
A3149A055 TO A3149A100	055 TO 100	3.79 TO 6.89	SEE NOTE A
A3149A105 TO A3149A150	105 TO 150	7.24 TO 10.34	SEE NOTE A
A3149A215	215	14.82	7,932
A3149A260	260	17.93	9,502
A3149A265	265	18.27	9,676
A3149A275	275	18.96	10,025
A3149A285	285	19.65	10,375
A3149A300	300	20.68	10,898
A3149A350	350	24.13	12,643
A3149A200 TO A3149A310	200 TO 310	13.79 TO 21.37	SEE NOTE B
A3149A315 TO A3149A358	315 TO 358	21.72 TO 24.68	SEE NOTE B

A3149A SERIES NOTES:

A. FOR VALVES NOT LISTED ABOVE, HAVING SET PRESSURES WITHIN 55 TO 150 PSIG, USE THE FOLLOWING PROCEDURE:
CALCULATE CAPACITY AS FOLLOWS: 32.66 X [(SET PRESSURE X 1.2) +14.7]

B. FOR VALVES NOT LISTED ABOVE, HAVING SET PRESSURES WITHIN 200 TO 358 PSIG, USE THE FOLLOWING PROCEDURE:
CALCULATE CAPACITY AS FOLLOWS: 29.086 X [(SET PRESSURE X 1.2) +14.7]

C. TO DETERMINE THE SET PRESSURE IN BAR USE THE FOLLOWING FORMULA: BAR = PSIG X 0.068948.

ASME/CE/UL LISTED

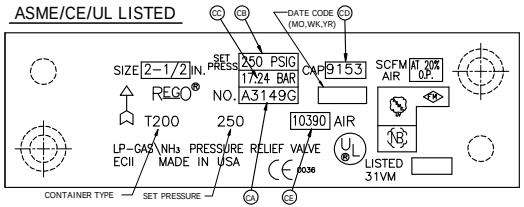

	VALVE RATING			
(CA) RELIEF VALVE NUMBER	(CB) SET PRESSURE (PSIG)	(CC) SET PRESSURE (BAR)	(CD) ASME FLOW DATA (SCFM AIR)	(CE) UL FLOW DATA (SCFM AIR)
A3149G	250	17.24	9153	10390

CE LISTED

	VALVE RATING		
(EA) RELIEF VALVE NUMBER	(EB) SET PRESSURE (PSIG)	(EC) SET PRESSURE (BAR) SEE NOTE E	(ED) FLOW DATA (SCFM AIR) SEE NOTE D
A3149L055 TO A3149L080	55 TO 80	3.79 TO 5.52	2608 TO 3577
A3149L090 TO A3149L120	90 TO 120	6.21 TO 8.27	3965 TO 5129
A3149L125 TO A3149L240	125 TO 240	8.62 TO 16.55	5323 TO 9783
A3149L250 TO A3149L300	250 TO 300	17.24 TO 20.68	10171 TO 12110

A3149L SERIES NOTES:

D. FOR VALVES WITH SET PRESSURES LISTED WITHIN 55-300 PSIG, USE THE FOLLOWING PROCEDURES:

SET RELIEF VALVE AT PRESSURE AS SPECIFIED BY LAST THREE DIGITS FOR PART NUMBER.

* CAPACITY CALCULATION =
32.32 X [(SET PRESSURE X 1.2) +14.7]

E. TO DETERMINE THE SET PRESSURE IN BAR USE THE FOLLOWING FORMULA: BAR = PSIG X 0.068948.

CE/UL LISTED

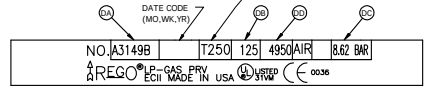

	VALVE RATING		
(DA) RELIEF VALVE NUMBER	(DB) SET PRESSURE (PSIG)	(DC) SET PRESSURE (BAR)	(DD) UL FLOW DATA (SCFM AIR)
A3149B	125	8.62	4,950
A3149T	312	21.51	13060

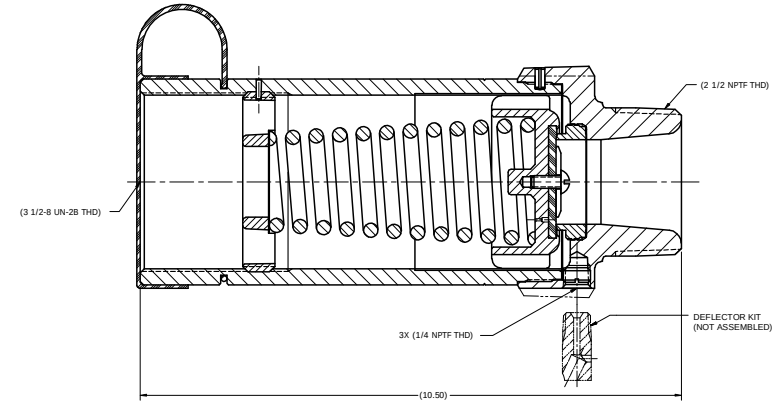

NOTES:

1. PREFIX IDENTIFICATION:

WHEN USED ON "A" SERIES (NITRILE SEAT) RELIEF VALVES, ADD PREFIX "A" TO RELIEF VALVE STAMPING IDENTIFICATION.

WHEN USED ON "KZA" SERIES (KALREZ SEAT) RELIEF VALVES, ADD PREFIX "KZ" TO RELIEF VALVE STAMPING IDENTIFICATION.

WHEN USED ON "UA" SERIES (CARBON DIOXIDE) RELIEF VALVES, ADD PREFIX "U" TO RELIEF VALVE STAMPING IDENTIFICATION.

WHEN USED ON "VA" SERIES (VITON SEAT) RELIEF VALVES, ADD PREFIX "V" TO RELIEF VALVE STAMPING IDENTIFICATION.

0036

TEMPERATURE RANGE: -40°F TO +165°F
BODY MATERIAL: DUCTILE IRON

REGO®
Burlington, NC 27215 U.S.A. • Phone (336) 226-3244 • Fax (336) 227-6294 • www.regoproducts.com

M. Glass 5-3-15

A3149 SER	RELIEF VALVE EXTERNAL, 2 1/2 NPT THD, STEEL